Open Joint-Stock Company
I. I. Polzunov Scientific and Development Association
on Research and Design of Power Equipment

Create new using the best

NPO CKTI JSC

OVERALL ACTIVITIES

Director for Service
and Strategic Development

S. Gavrilov

GavrilovSN@ckti.ru
+7-921-744-37-26

Company History

CKTI was established in 1927, during the implementation of GOELRO plan (Soviet plan for national economic recovery and development). Academician A. F. Ioffe, Associate Members of the Academy of Sciences M. V. Kirpichyov and M. A. Chatelain, professor V. N. Schröter have initiated the creating of new R&D organisation – to provide the research and development (R&D) support for the native energymachinebuilding and energy generation industries.

The name of the institute was altered several times at different stages of its development due to variable structure the boiler and turbine manufacturing industry: Heat Engineering Research Bureau **(BYuTI),** Leningrad Regional Heat Engineering Institute **(LOTI),** Boiler and Turbine Research and Development Institute **(NIKTI),** All-Union Heat and Hydropower Equipment Institute **(VITGEO),** and finally – **since 1935– CKTI or Central Boiler and Turbine Institute (CKTI).**

The main areas of business were defined as: creation of the heat exchange process modelling theory, development of automatic regulation theory and systems, circulation calculation methods, research of heat exchange processes inside boilers, combustion processes, high-velocity flows, research of cascades of turbine profiles, issues of strength and lifetime of power equipment etc.

Fundamental research and development executed in NPO CKTI, created prescriptive calculation methods and design methods have created a basis for the development of the native power plant engineering.

In 1947, the institute was awarded the name of wellknown Russian inventor of heat machine **Ivan Ivanovich Polzunov.**

In 1960, by the ruling of the Government, CKTI was **assigned a role of the leading R & D organisation** of energymacinebuilding industry.

In 1976, by the ruling of the Government, CKTI became a host to the Scientific And Development Association On Research And Design Of Power Equipment – **NPO CKTI.** This Association included Central Boiler and Turbine Institute, CKTI Pilot Factory, branches in Barnaul and Rostov.

In 1977, NPO CKTI was awarded **the Order of the October Revolution** in recognition of its R&D efforts aimed at creating new power equipment**.**

In 1994, the Association was privatised, its structure was reformed and its became the Open Joint-Stock Company NPO CKTI.

In April 2002, the enterprise was reorganized and became **Open Joint-Stock Company I. I. Polzunov Scientific and Development Association on Research and Design of Power Equipment Power Equipment (NPO CKTI JSC)**

NPO CKTI JSC is a leading scientific and engineering center in native power plant engineering. The enterprise is focused on the development and promotion of state-of-the-art technology and innovative products for nuclear, thermal and hydropower plants, industrial and domestic power engineering.

Intellectual potential

NPO CKTI JSC has 821 employees, out of which 511 ones have high education (dyploma engineers) and 82 ones have academic degrees, such as Candidate of Sciences (PhD) or Doctor of Sciences (DR).

In 2004, a quality management system (QMS) was successfully implemented in the NPO CKTI JSC.

Compliance of the quality management system with the requirements of ISO 9001:20015 and the national standard GOST ISO 9001-2015 **is confirmed by the Systems of certification of the Russian Register No.: 16.1425.026**, and the national certificate No.: 16.1430.026 since 12 sept. 2018.

CKTI NPO JSC has eight operating licenses, including one for nuclear power engineering activities.

CKTI NPO JSC is a member of the Self-Regulated Organization “Non-profit Partnership SOJUZATOMPROEKT”, Noncommercial partnership Centre of Energy Audit, and Self-Regulated Association “Community of Builders of St. Petersburg”.

The enterprise has its own **Power Equipment Testing Center** (ICEO), which was **certified** by the Federal Certification Agency of the Russian Federation and the **State Atomic Energy Corporation Rosatom**.

International Economic Activity of NPO CKTI JSC

NPO CKTI JSC has years of experience in cooperation with American, Western and Eastern European, Japanese, Chinese, South Korean companies and organizations. We have also established a business connection with Baltic and CIS countries.

We sustain our partnership with the following companies:

Alstom Power Ltd., *Switzerland*;
General Electric, Bechtel, *USA;*
Mitsubishi Heavy Industries Ltd., IHI, **FUCHINO Co Ltd**., *Japan*;
Siemens AG, BBS GmbH, *Germany*;
EDF, *France;*
JNPC, Fujuan, *China;*
Entegro Ltd., *Greece;* **REK Bitola,** *Macedonia;*

Energico OY, Fortum Power and Heat Oy, *Finland;*
Slovenské energetické strojárne AS, *Slovakia;*
Škoda Power AS, *Czech Republic;*
«Brikel», *EAD*;
Energoremont-Varna-Invest, **Kozloduy NPP, Maritsa – East,** *Bulgaria;*
AS Narva Elektrijaamad, VKG Oil AS, *Estonia;*
Latvenergo, (Daugavas HES), *Latwia;*
Kauno Energetikos Remontas, *Lithuanian Regional SDPP;*
Kruonis Pumped Storage Plant, *Lithuania;*
KUdankulam NPP, Sipat TPP, Barh TPP, *India;*
Bushehr NPP, *Iran;*
Ust-Kamenogorsk HPP, *Kazakhstan,* as well as leading companies of *Ukraine, Belarus, Moldova, Tajikistan,* etc.

Organization Structure

Follow divisions and departments create an organisation structure of NPO CKTI JSC:

- Heat Exchange and Cycle Equipment Division
- Turbine Units Division
- Boiler Units Division
- Advanced Development Department
- Mechanical Integrity and Lifetime Division
- Power Equipment Test Center

Heat Exchange and Cycle Equipment Division

- **Heat Exchange Equipment Department:**
  - *surface heat exchangers for CCP and NPP*
  - *steam turbines regeneration schemes equipment modernization and testing*
  - *mixing heat exchanger, evaporator and auxiliary equipment*
  - *thermal deaerators*
  - *surface heat exchangers for industrial units designed for disrtict heating systems.*

Heat Exchange Equipment Department

Effective and reliable heat exchanger for heat supply systems

Water-water heaters of PVMR type

Features of PVMR heaters:

- floating small-size water chamber;
- small heater footprint and volume;
- removable matrix for annular space cleaning;
- low dirt retention due to increased water flow velocities.

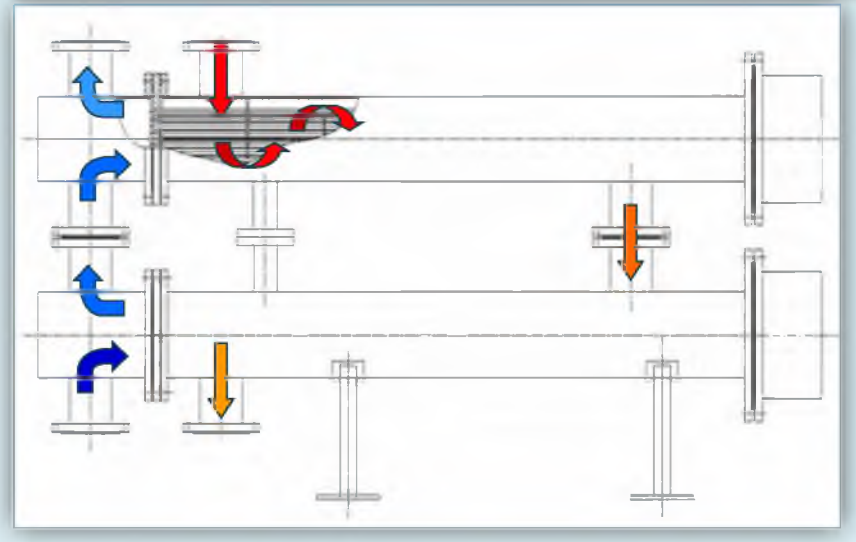

Heat Exchange Equipment Department

Steam-water heaters with built-in condensate cooler

Improved matrix:

- one-way transverse steam motion through a tube bundle;
- separated cooling zone for steam-air mixture;
- rigid frame and small size free spans of tubes.

Availability of cooling zone for heating steam condensate allows eliminating the use of external condensate coolers.

Schematic diagram of boiler room when system water heating unit is equipped with heaters with built-in condensate cooler and heater of PVMR type.

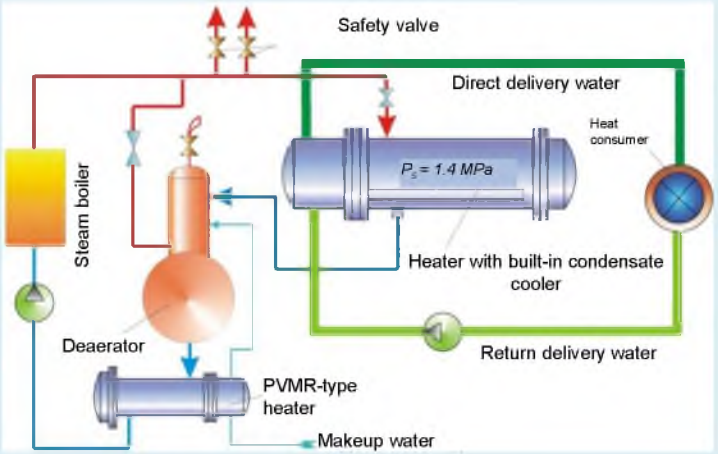

Heat Exchange Equipment Department

New vertical delivery water heaters of PSVK type

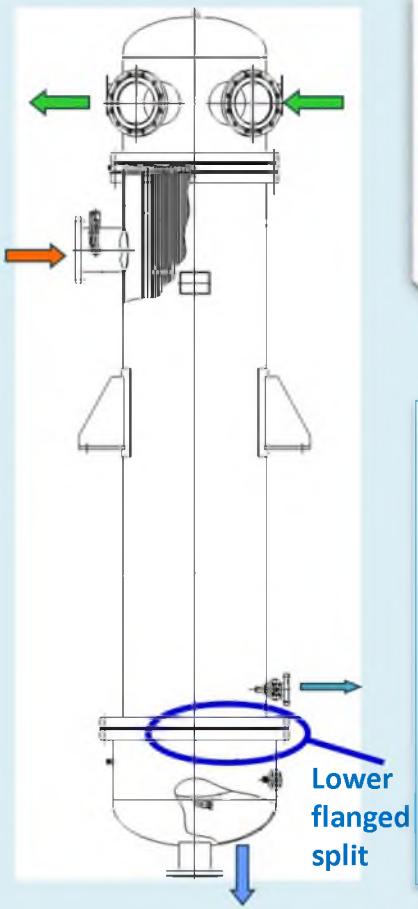

Features of PSVK heaters:

- a flanged split available in the lower part of the shell, which considerably facilitates the maintenance and repairs on the heaters in boiler plants;
- the matrix design provides a higher thermal capacity of the heater at reduced dimensions of its shell;
- the matrix features a high stiffness and anti-vibration reliability.

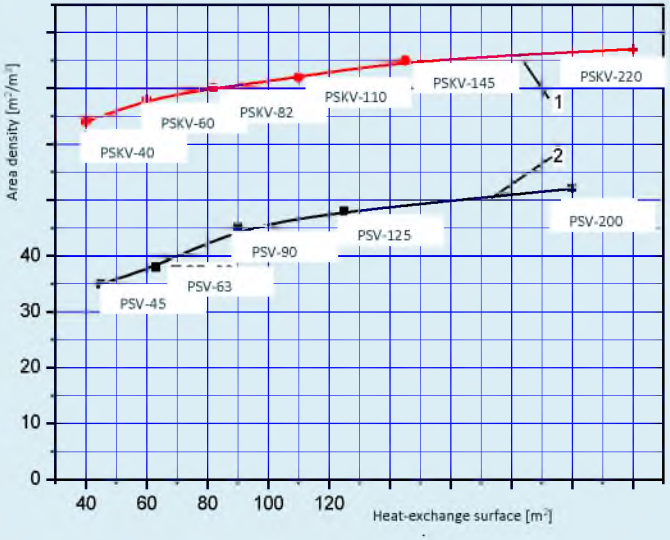

Heat Exchange Equipment Department

Liquid Fuel heaters

Low capacity steam fuel oil heaters

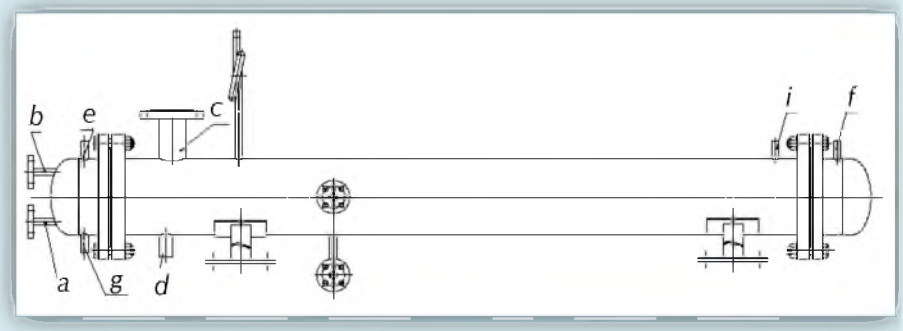

The heaters have capacity of **250–1600 kg/h**, provide heating of M100 fuel oil at nominal flow rate to the temperature of **70 to 95 °C** at the steam pressure of **10 kgf/cm²**. The heaters are designed for fuel oil pressure of **25 kgf/cm²**. PPM heaters have a built-in cooler of heating steam condensate.

Water fuel oil heaters

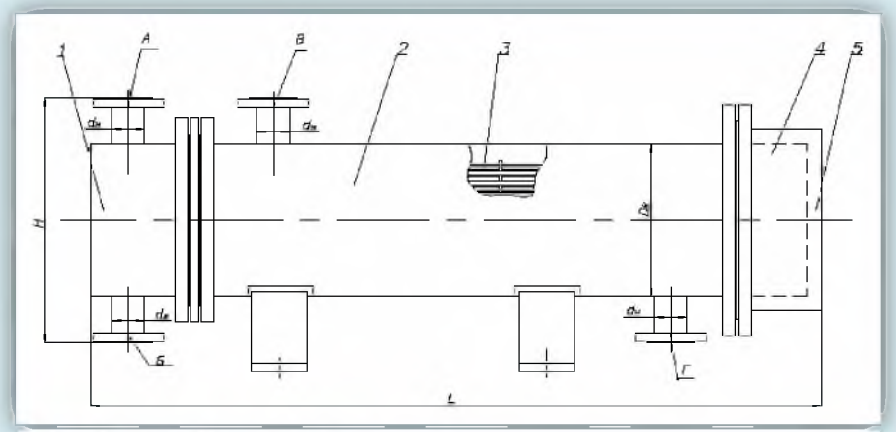

Heating medium – water

The heater provides heating of M100 fuel oil to the temperature of **60 to 95 °C**; capacity is 500–2500 kg/h.

Fuel oil heaters with finned tubes, replacing PMR heaters

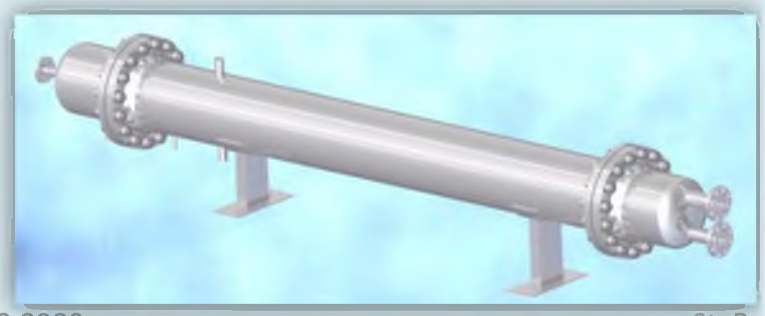

Heaters of PMRN type provide heating of M100 fuel oil to the temperature of **60 to 135 °C**, have capacity of **6 to 400 t/h**, higher thermal efficiency and lower hydraulic resistance in comparison with PMR heaters (production which is terminated), and practically match by mounting dimensions.

Heat Exchange Equipment Department

Steam turbines regeneration schemes equipment modernization and testing

Chamber-type high-pressure heaters (PVD-K)

Main structure elements:

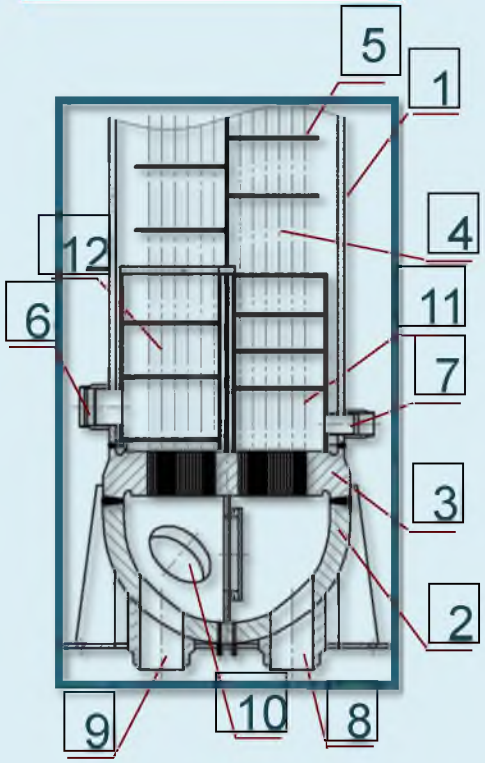

1. Steam shell
2. Spherical water chamber
3. Tube sheet
4. Heat exchange tubes
5. Partitions
6. Steam inlet tube
7. Heating steam condensate outlet tube
8. Feed water inlet
9. Feed water outlet
10. Manhole
11. Condensate cooling area
12. Steam cooling area

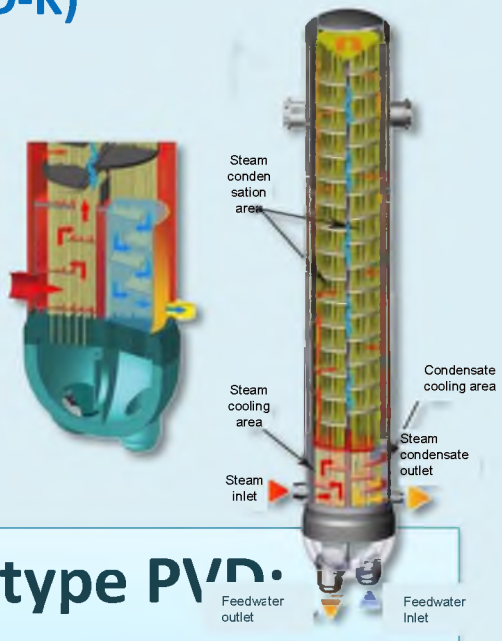

Advantages of chamber-type PVD:

operation safety:

the chamber PVDs don't feature headers, which can lead to serious accidents at power units and significant destruction in the turbine hall.

Chamber PVD is designed for simultaneous rupture of 7 nearby tubes, without causing the unit to stop due to PVD fault.

Short payback period.

Heat Exchange Equipment Department

Steam turbines regeneration schemes equipment modernization and testing

Horizontal high-pressure heater of chamber type (PVG-K)

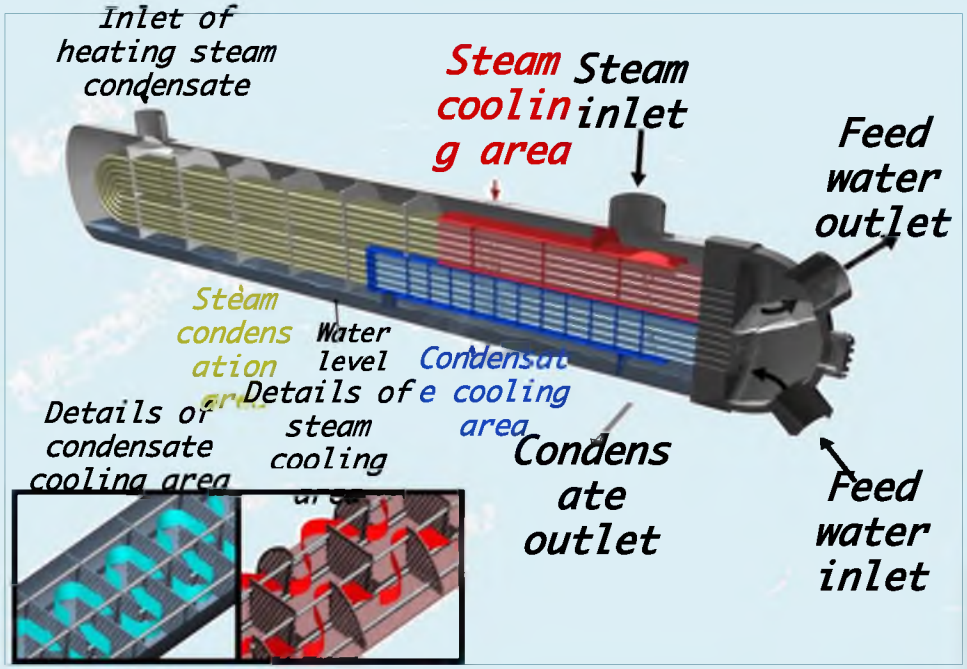

Main structure elements:

- casing;
- spherical water chamber;
- tube sheet;
- heat exchange tubes;
- Partition;
- steam inlet tube;
- heating steam condensate outlet tube;
- feed water inlet;
- feed water outlet;
- manhole;
- condensate cooling area;
- steam cooling area.

Chamber-type high-pressure heaters (PVD-K)

Absence of water mass in the steam space of the heater is advantage of horizontal design. It decreases a possibility of moisture entering the turbine and turbine rotor overspeed, i. e. overall reliability of the turbine increases.

Heat Exchange Equipment Department

Steam turbines regeneration schemes equipment modernization and testing

Development and supply of control valves (CV) and fast safety device (FSD)

Control valves (CV)

Fast sefety device (FSD) for high pressure heaters (PVD)

Improved design and process solutions:

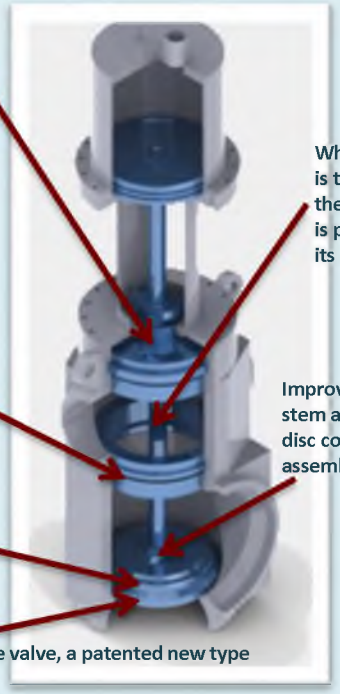

FSD valves (inlet and outlet)

Heat Exchange Equipment Department

Thermal deaerators sector

High-pressure deaerator DP-1000/120

The deaerator design is based mainly on well-known and proven solutions. The use of a jet nozzle as a low-pressure water distributor at the top of the column allows creating an additional contact surface of the water and vapor phases to improve heat and mass transfer and thereby improve performance of the deaerating column. Use of two jet stages in the column and the flooded bubbling device in the tank can guarantee the required water heating and deaeration.

Prototype of deaerator DP-1000/120 was manufactured by LLC Sibenergomash-BKZ in 2005 and installed in 300 MW turbine unit circuit at Wong Bi TPP in Vietnam later.

According to NPO CKTI JSC, it is reasonable to develop proposals for **creation of a series of new high-pressure deaerators** for use in circuits of new power units and modernization of existing ones with a capacity of **200–300 MW**, aimed to:

- increase of maneuverability of the power unit operation;
- reduce vertical dimensions and simplify the deaerator design;
- ensure reliable operation of the deaerator at sliding pressure under starting and transient modes;
- improve the operating economy of the turbine plant by increasing operating pressure in the deaerator and working at sliding parameters depending on the turbine load.

Pump equipment development and research for fossil and nuclear power plants

Hydroturbine driven pumps for power units of Thermal Power Plants and Nuclear Power Plants

NPO CKTI JSC **was the pioneer in the power plant industry** in the creation of pumps with a hydroturbine drive for power units of Thermal Power Plants and Nuclear Power Plants. High-speed electric and gas turbine driven repressuring pumps were created in cooperation with JSC Klimovand JSC Votkinsky Zavod for oil production.

General view of the assembled CPHTD pump unit 850–400 A before installation of thermal insulation

Pumps with a hydroturbine drives designed by NPO CKTI JSC have the following benefits in comparison with traditional pumps of similar parameters **at equal efficiency**:

- significantly smaller dimensions;
- are mounted on pipelines without special foundations;
- require no auxiliary lubrication systems.

The CPHTD type pump 850–400 (displacement of 850 m^3/h, head of 400 m) for the turbine plant K-1000-60/3000 by LMZ JSC has a **weight of less than 3 tons**, diameter of 780 mm, height of 1200 mm.

Preliminary studies of electric driven pump with similar parameters show that the weight of such unit is about 10 tons.

Turbine Units Division

Main Departments and Laboratories

- Steam Turbines Department
  - *Industrial Research And Turbine Plant Modernization Laboratory;*
  - *Vibration Laboratory;*
  - *Blade Row Vibration Reliability Laboratory;*
- Turbine Units Research Department
  - *Steam Turbine Research Laboratory;*
  - *Gas Turbine and Combine Cycle Laboratory;*
  - *Compressors Units Laboratory;*
- Hydropower and Hydropower Equipment Department;
- Department on Service Life, Engineering Diagnostics and Repair Technologies of Power Equipment Metal.

Hydropower and Hydropower Equipment Department

An example of creation of new turbine flow path for a small hydroelectric power plant

1. *Water turbine unit*
2. *Runner (D = 2.6 m)*
3. *Multiplier*
4. *Generator*
5. *Suction cone*
6. *Discharge ring*
7. *Butterfly valve*
8. *Feed diffuser*
9. *Lubrication and water cooling systems*

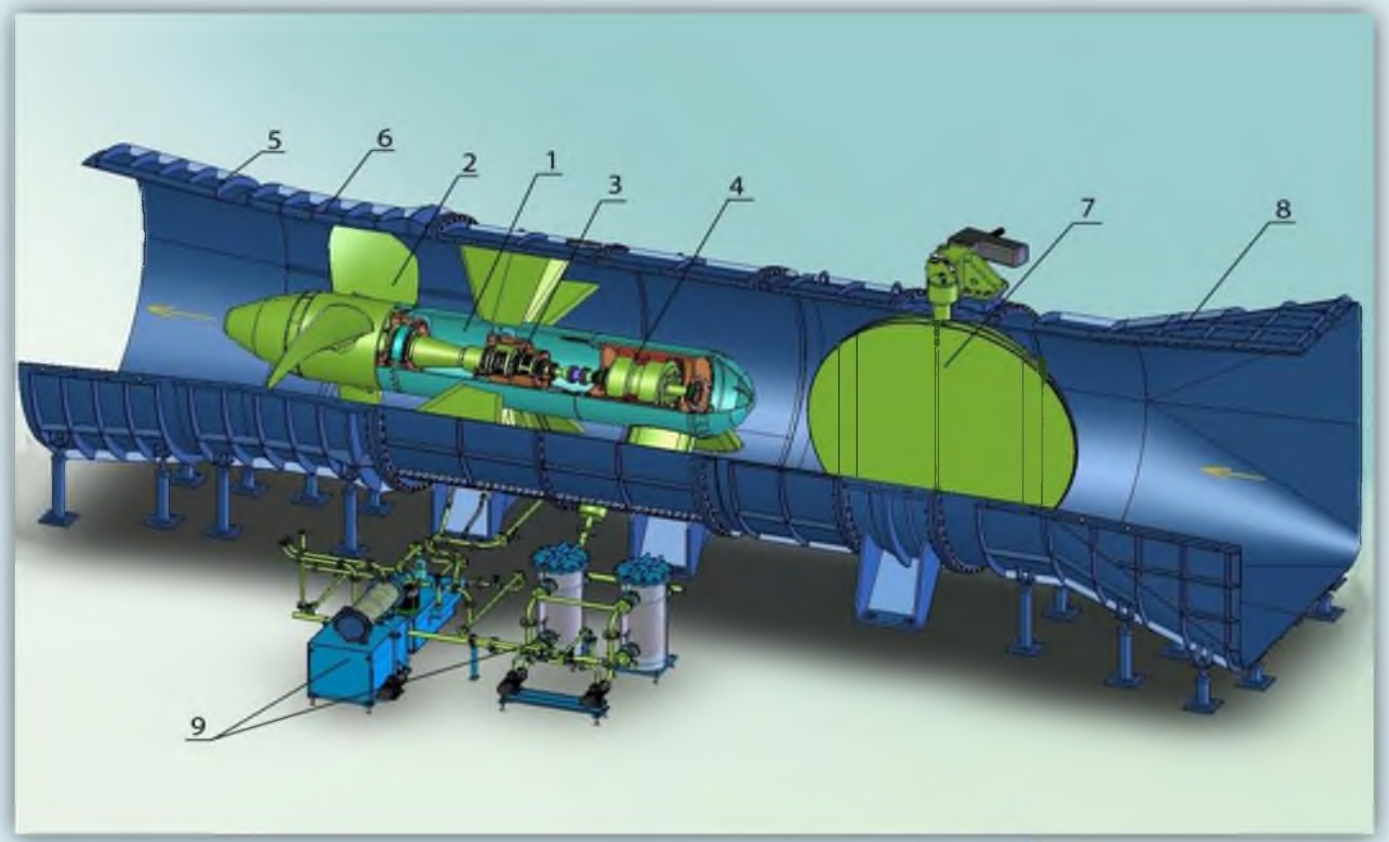

Hydroelectric unit is manufactured for the hydroelectric power plant in Colombia (Mitu)
Power – 600 kW, head – 2.5 m

Hydropower and Hydropower Equipment Department

Examples of creation of new hydraulic turbine flow paths for small hydroelectric power plants

Variable-speed hydroelectric unit for Mitu HPP (Colombia)

Pelton wheel

1.8 MW hydroelectric unit at Dzhradzor HPP (Armenia)

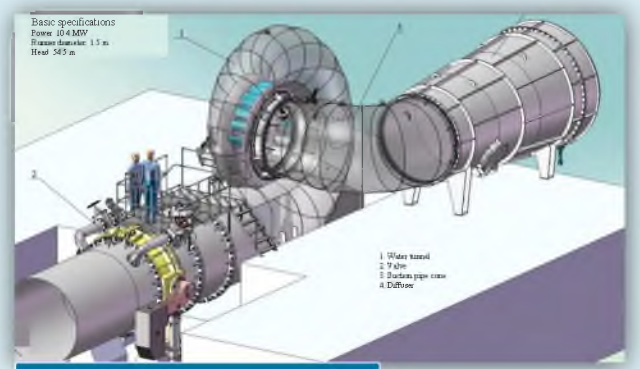

Hydroelectric unit of Mendre HPP Power – 10.4 MW

Hydropower and Hydropower Equipment Department

Examples Of Industrial Test Of Hydraulic Turbines Of Operating Hydroelectric Power Plants

Absolute Energy Tests

Calibration of hydrometric propellers in the pool

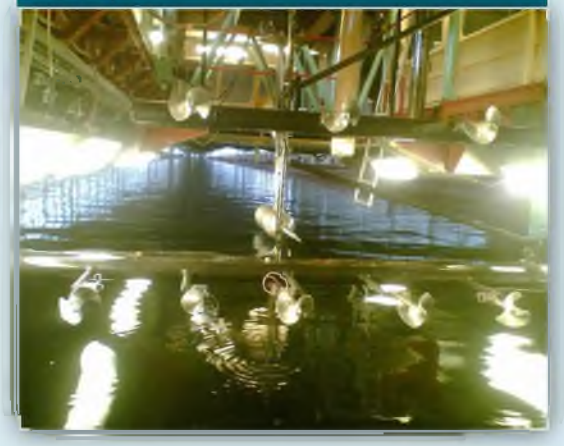

Frame with hydrometric propellers

Installation of hydrometric propellers in the penstock

Turbine Plant Vibration Measuring Diagnostics System VIDAS

The Purpose of VIDAS System

- Monitoring of vibration parameters, mechanical values and operating parameters.
- Automatic diagnostics of vibration state based on analysis of vibration, thermal-mechanical and operating parameters.
- Works in examination mode (analysis of archive data, spectra, levels, trajectories, vibration modes, etc.).
- Archiving of data on vibration state of turbine plants, thermal-mechanical, operating parameters and results of diagnostics for the whole period of plant operation with the possibility of their subsequent presentation and analysis.
- Determination of optimal arrangement options for balance weights using the program of multiplane dynamic balancing included into the delivery set of VIDAS system.
- Assurance of “remote service (engineering)” with the least help on site needed from NPO CKTI JSC experts and the maximum coverage of generating equipment. The Web-version of VIDAS software was developed in order to ensure full remote service of controlled turbine equipment.

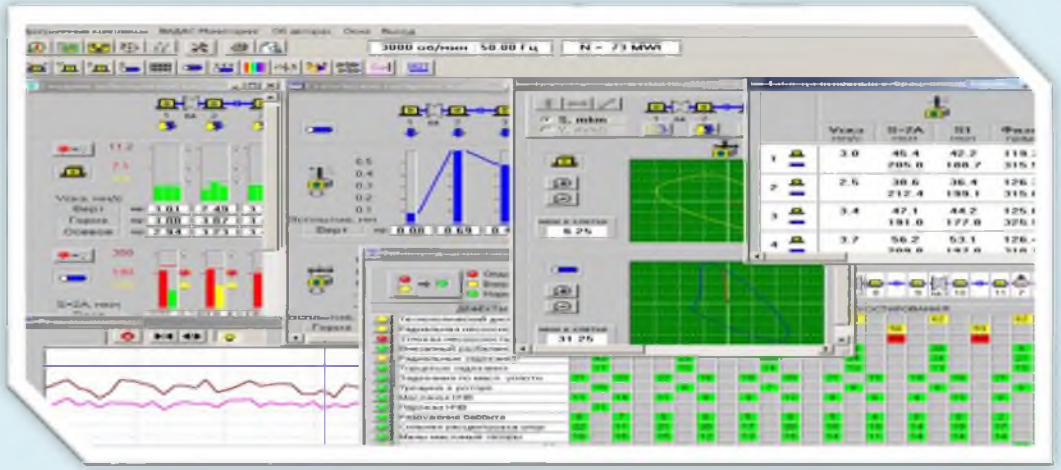

Steam Turbines Department

Blade Row Vibration Reliability Laboratory

Electromagnetic treatment (demagnetization) of units and parts of the turbine plant in the repair process

Demagnetization is performed to prevent electrical erosion damages of guide bearings from monopolar electromotive forces.

Demagnetization unit

System of Operational Control for Electromagnetic State of Turbine Equipment

The system is designed for continuous operational diagnostics of electromagnetic state for turbine plant and timely detection of the following:

- improper operation of current collector;
- unallowable low resistance of journal insulation of insulated guide bearings;
- unallowable low resistance of insulation of oil films;
- occurrence of rotor current short circuit loops.

Appearance of electromagnetic state controller

References

Nuclear power industry

- Leningrad NPP – 1990, 1999–2002, 2007–2012
- Balakovo NPP – 1992
- Beloyarsk NPP – 1992, 2008–2011
- Kola NPP – 2007
- Paks NPP (Hungary) – 2013
- Kalinin NPP – 2014
- Loviisa NPP (Finland) – 2014

Thermal power industry

- Ekibastuz SDPP-1 – 1984
- Riga CHPP-1 – 1988, 1995
- Novocheboksarsk SDPP – 1990
- Balakovo CHPP-4 – 1991
- Reftinskaya SDPP – 1993
- Surgut SDPP-2 – 1995–1999, 2011
- CHPP-1, 11 23, 26 (Moscow)– 1997–1998
- Mosenergo SDPP-24 – 2001
- Lipetsk CHPP – 2001
- Cherepovets CHPP – 2002
- Perm SDPP – 2008, 2012–2016
- Nizhnevartovsk SDPP – 2008, 2010
- CHPP-21 (Moscow) – 2011–2012
- Chelyabinsk CHPP-3 – 2013
- Kaliningrad CHPP-2 – 2013–2014
- Urengoy SDPP – 2015
- CHPP-22 (St. Petersburg) – 2011, 2015
- Nizhnekamsk CHPP – 2015
- CHPP-27 (Moscow) – 2016
- Lidio Ramón Pérez TPP (Cuba) – 2016
- Pronico TPP (Guatemala) – 2016

Boiler Plant Department

- ✓ Development of boiler units of various types and purposes, as well as their elements.
- ✓ Development of technologies to increase steam production capacity of boiler plants.
- ✓ Adjustment of boiler plants for lower steam conditions, extension of control range.
- ✓ Chemical-heat tests and commissioning of power boilers, heat recovery boilers, industrial power boilers.
- ✓ Thermal, hydraulic, strength, aerodynamic analyses; calculation of wall temperature (including boilers with circulating fluidized beds).
- ✓ Inspection of metal structures, development of new designs and restoration projects for damaged boiler shells and exhaust stacks.
- ✓ Development and supply of boiler diagnostic systems.

Boiler Plant Design, Adjustment and Research Department

Boiler Hydraulics, Separation and Boiler Unit Design Laboratory

Boiler Equipment Design Group

- Activities aimed at creating new equipment.
- Modernization of operating equipment in order to increase reliability of heating surfaces, decrease of allowable load limits, increase of steam quality.
- Aerodynamic, thermal (including boilers with circulating fluidized bed furnace) calculations, calculation of wall temperature via proprietary software (TopHeat, Heat-KS, TSten-K, TSten-R). Thermal calculation in the licensed version of Boiler Designer software.

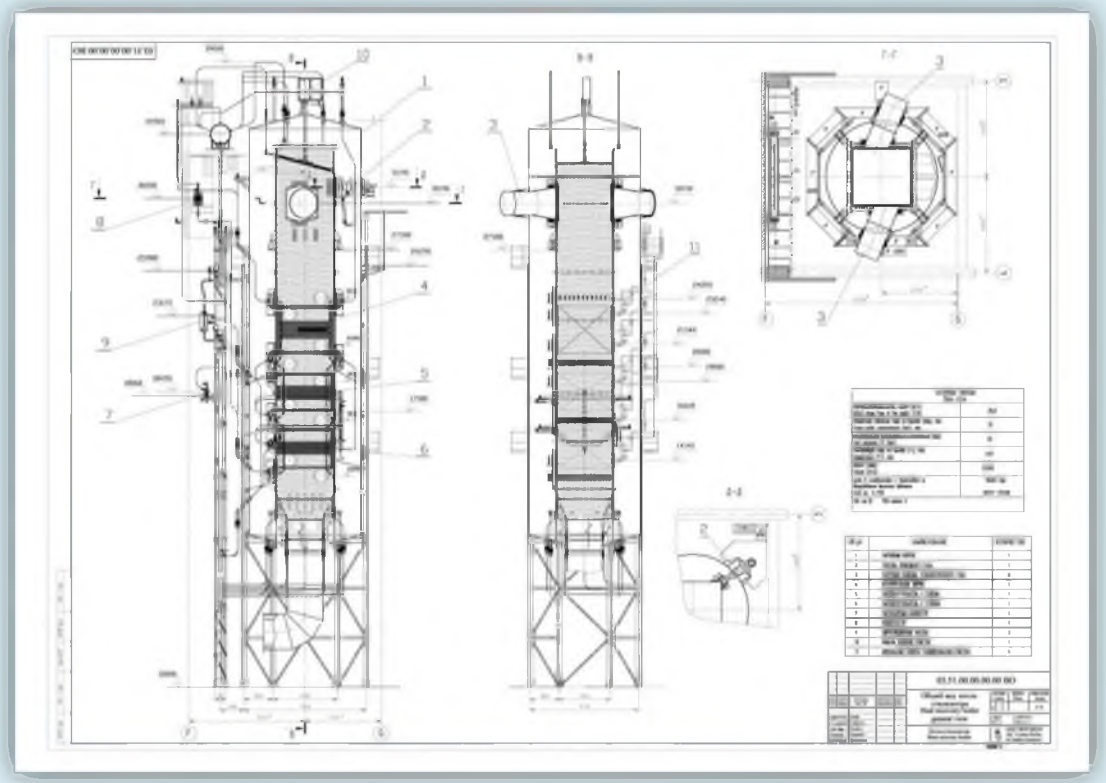

Boiler Plant Design, Adjustment and Research Department

Fuel Preparation And Combustion Laboratory

Oil-gas burner GMU-m with tubular gas distribution

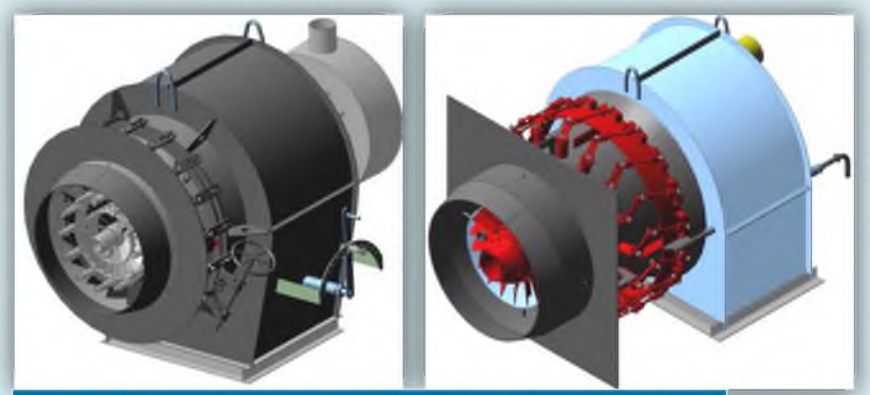

Oil-gas burner GMU-m with adjustable blade row

NPO CKTI JSC has designed state-of-the-art burner devices for highly efficient low-toxicity combustion of blast-furnace gas, coke gas other types of associated gas in metallurgy.

Also, one of the example of using the NPO CKTI JSC burners in metallurgy is the introduction of powerful versatile pilot burner for sulfur furnace at the sulfuric acid production shop (Phosphorit plant (Eurochem Group), Leningrad Oblast, Phosphorit industrial zone).

Gas burner for burning blast-furnace and natural gases

Combined flat-flame gas burner for burning blast-furnace, coke and natural gases.

Main engineering activities

- Technical health, industrial safety and project expert reviews (including technical evaluation, filing reports on equipment health and giving recommendations on equipment modernization).
- Complete technical diagnostics (vibration tests with remote access from NPO CKTI, electromagnetic state, non-destructive and destructive testing).
- Repair supervision (giving advice and technical solutions on restoring repair).
- Equipment tests (certification, commissioning, strength testing, both on test rigs and in operating conditions).
- Extending service life of equipment beyond economic life.

Extension of service life

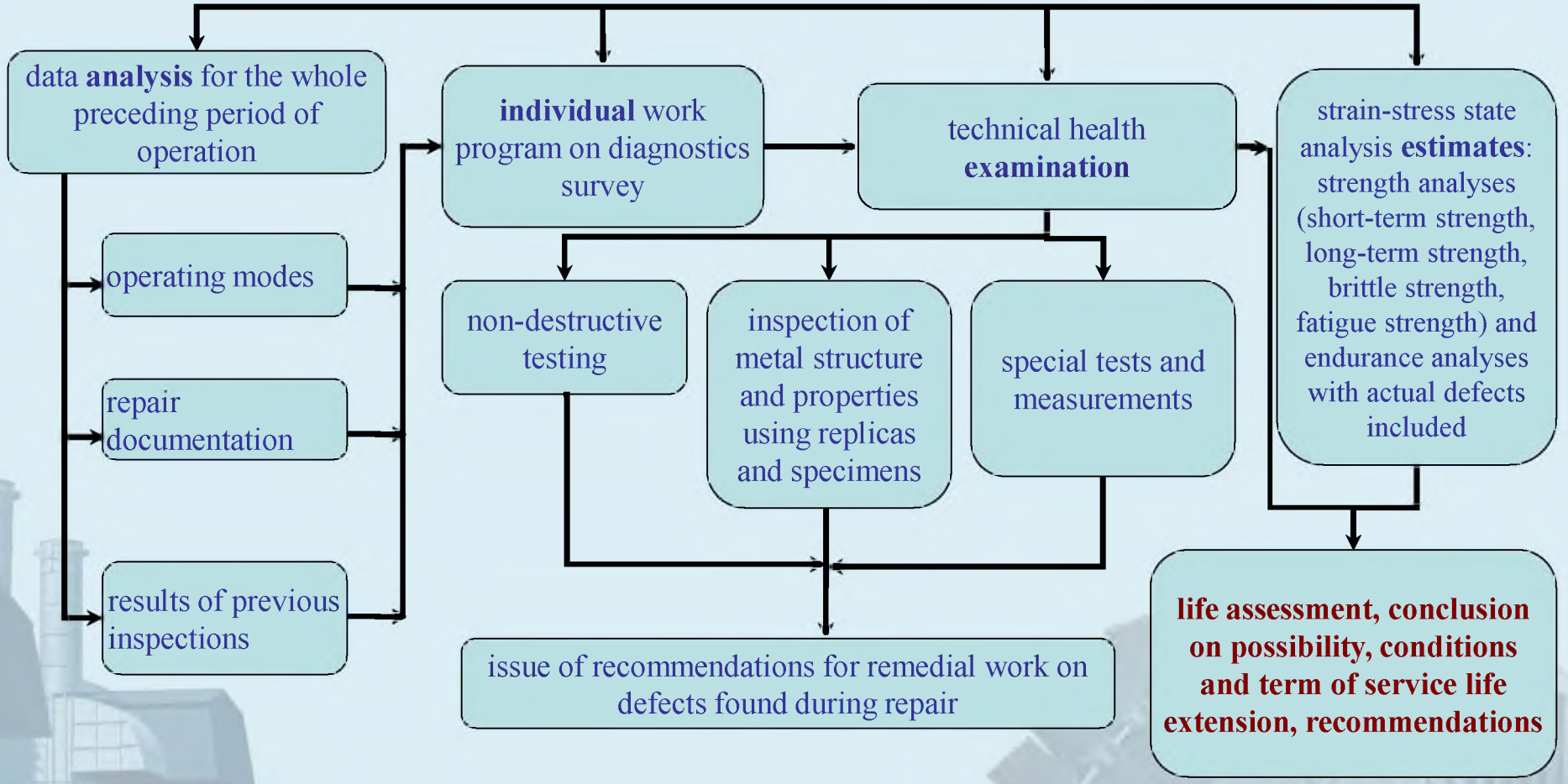

Technical Diagnostics

- Non-destructive testing

Dye penetrant inspection

Cracked teeth on HP turbine GTK-10

Structures of metals obtained from metallographic replicas

martensitic

austenitic

ferritic-pearlitic

- Destructive testing (analyzing mechanical properties of steels and alloys, long-term strength characteristics, creep, and thermal fatigue).
- Vibration testing.
- Diagnostics of electromagnetic state of turbine equipment and its demagnetization.

Results of turbine health inspection

Corrosive cracking of capped disks in the key sealing area (phase transition zone)

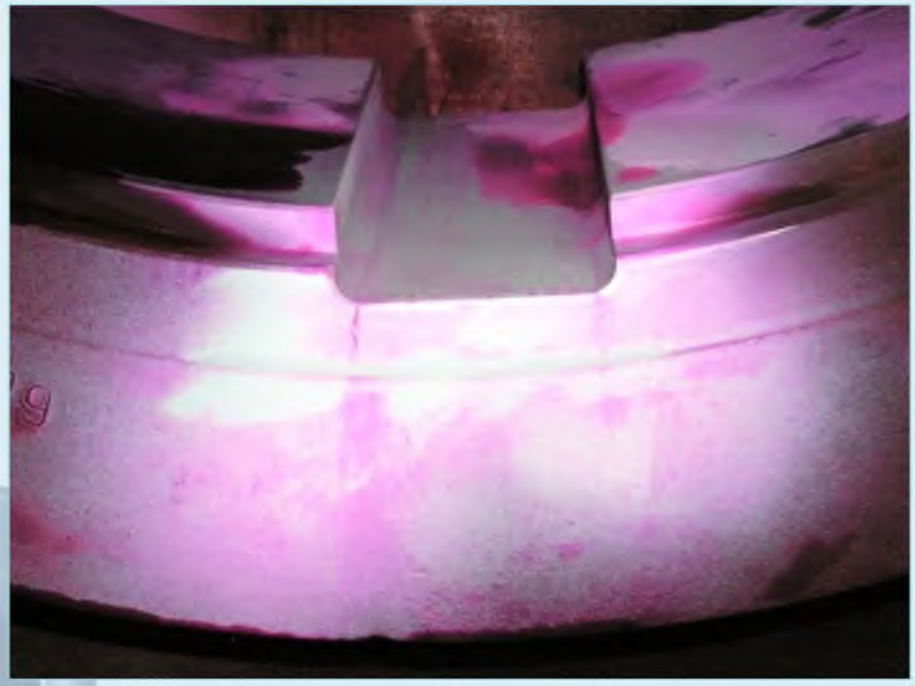

Identification of causes of deposits forming in pipes, and causes of damages to pipes of various types

Pipes with deposits on internal walls

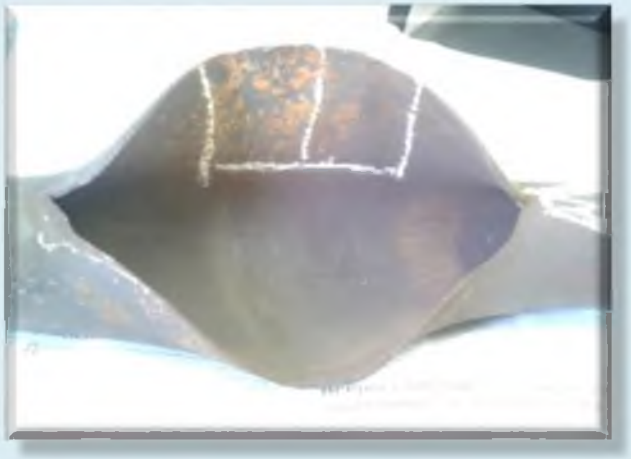

Damaged waterwall tubes

Stress-strain analysis for High Pressure Rotor

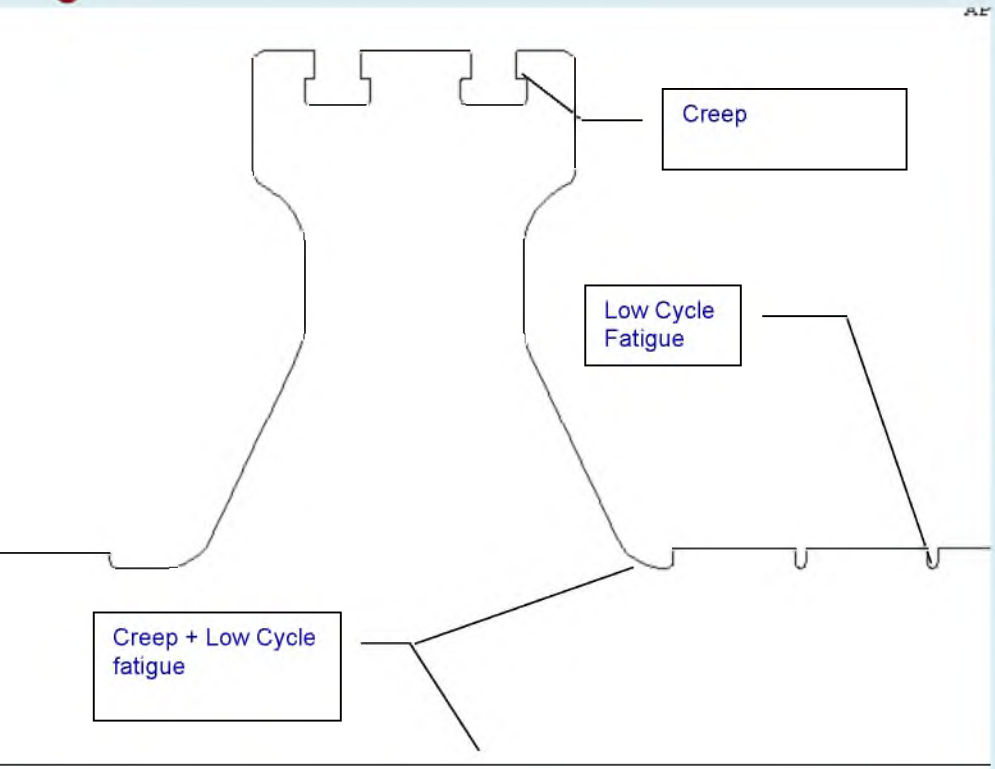

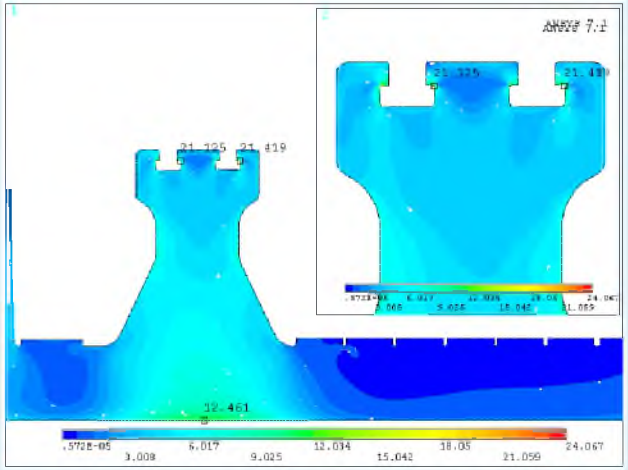

Distribution of equivalent stresses in the rotor section at reference time and with settled creep (kgf/mm^2)

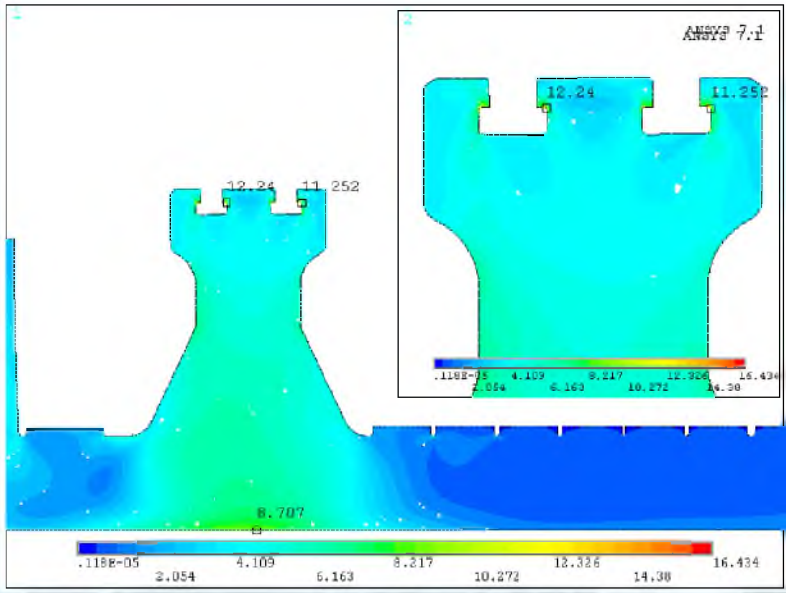

Areas of rotor prone to damage due to creep and low cycle fatigue:
heat grooves; disk fillets; axial passage; disk rim

Assistance with repairs

- Providing recommendations and technical solutions on restoring repair.
- Metallographic analysis. Expert review of test results fro metal and welded joints.
- Development of welding technologies, including ones not requiring heat treatment.
- Development of heat treatment technologies.
- Certification research of welding technologies and issuing of expert reports on compliance of weld metal with the requirements set by the official supervising bodies.
- Retrofitting of structures by welding, including cast body parts, beams, vessels, etc.

Welding Technology Development

Using the developed welding technology has successfully repaired cast shells of turbines, the shells of emergency regulating valves, LPH, rotors, etc.

Through cracks in cast shells of high pressure cylinders (HPC) before and after welding

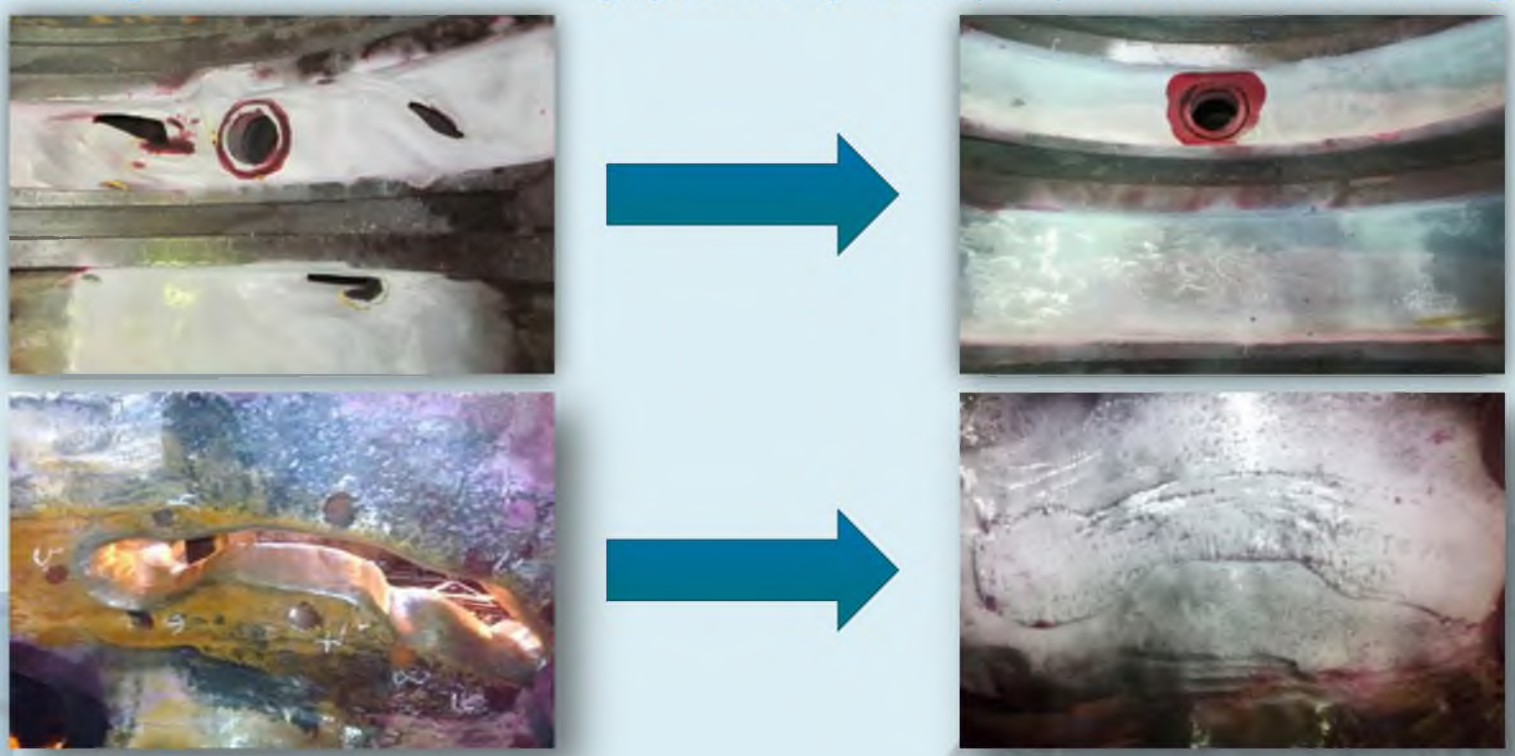

Extending service life of power-generating equipment. References

No.	Turbine	Vendor	Year
1	T-50-130 Balakovo CHPP	TMZ	1992
2	R-3,5 turbine plant GTT-12 Kirovo-Chepetsk Chemical Plant	KTZ	1993
3	T-250-240 stage 1, Yuzhnaya CHPP Lenenergo	TMZ	1995
4	PT-60-130/13 stage 1 Novocheboksarsk CHPP-3	LMZ	1995
5	GT-100 Krasnodar CHPP	LMZ	1995
6	T-100/120-130, stage 2, Kostroma CHPP-2	TMZ	1996
7	PT-60-130/13, stage 2T, Kirishy SDPP	LMZ	1997
8	K-300-240, stage 4, Kirishy SDPP	LMZ	1997
9	PT-25-90/10-4, stage 6, Tambov CHPP	TMZ	1999
10	PT-50-130/7, stage 1T, Kirishy SDPP	TMZ	2000
11	AT-6, stage 2, Livny CHPP, Orelenergoremont JSC	NZL	2000
12	K-300-240, stages 1, 8 Konakovo SDPP	LMZ	2000
13	GTK-10-4 at gas transmission stations	NZL, KhEMZ	2002
14	PT-25-90/10-3, stage 2, Severstal SATPP	LMZ	2002
15	VT-22-11, stage 1, Severstal SATPP	NZL	2003
16	VR-25-2, stage 2, Ufa CHPP-3	KhTZ	2003
17	AP-25-2 Izhorskiye Zavody CHPP	LMZ	2003
18	PT-25-90/10-4, stage 4, Severstal SATPP	TMZ	2003
19	GUBT-12 Severstal PJSC	TMZ	2004
20	K-300-240 , stage 6, Novocherkassk SDPP	KhTZ	2004
21	AKV-18-1, stage 4, Severstal SATPP	NZL	2004
22	K-200-130, stage 11, Shchyokino CHPP	LMZ	2004
23	R-4/15M, stage 1, Severstal SATPP	KTZ	2005
24	PT-12-35/10M, stage 2, Ammofos CHHP, Cherepovets	KTZ	2005
25	PT-60-130/13, stage 5, Severstal SATPP	LMZ	2005
26	VR-6-2, stage 1, Severstal SATPP	TMZ	2006
27	T-50-130, stage 6, Severstal CHPP	TMZ	2006
28	AKV-14, stage 2, Severstal CHPP	NZL	2006
29	T-25-4, stage 4, Severstal SATPP	BPZ	2007
30	PT-25-90/10-5, stage 4, Lenenergo CHPP-7	TMZ	2007
31	K-50-90, stage 2, Sakhalin CHPP	LMZ	2007
32	PT-60-90, stage 7, CHPP-1 at Arkhangelsk	LMZ	2007

	Pulp and Paper Mill		
33	PT-25-90-4, stage 1, Irkutsk CHPP-11	TMZ	2008
34	T-12/12-60/2.5, stages 1–4, Bilibino NPP	Czechoslovakia	2003–2008
35	PT-80-130, stages 1, 2, Severstal SATPP	LMZ	2003–2009
36	K-200-130, stages 1, 2, Cherepovets CHPP	LMZ	2007–2008
37	K-220-44, stages 1–4, Kola NPP	KhTZ	2002–2008
38	K-500-65/3000, stages 1–6, Leningrad NPP	KhTZ	2003–2009
39	PT-60-90/13, stage 5, Tulachermet SATPP	LMZ	2010
40	PT-50/60-130/7, stage 12, Novokemerovskaya CHPP	LMZ	2010
41	K-220-44, stage 8, Kola NPP	KhTZ	2010
42	K-200-130, stage 6, Gusinoozersk SDPP	LMZ	2011
43	K-500-65/3000, stages 7, 8, Leningrad NPP	KhTZ	2011
44	APT-12-1, stage 5, Arkagalinskaya SDPP	NZL	2012
45	HP and IP rotors of turbine K-200-130, stage 11, Shchyokino CHPP	LMZ	2012
46	K-220-44, stage 7, 8, Kola NPP	KhTZ	2012
47	PT-60-130, stage 2, Vladinir CHPP-2	LMZ	2012
48	K-50-90, stage 5, Sakhalin CHPP	LMZ	2013
49	T-12/12-60/2,5, stage 1, Bilibino NPP	Czechoslovakia	2013
50	T-100/120-130-3, Kemerovo SDPP	TMZ	2013
51	MK-6-1, stage 3, Pauzhetskaya GTPP	LMZ	2013
52	OK-12A, Power Unit 2, Kalinin NPP	KTZ	2014
53	T-12/12-60/2,5, stage 3, Bilibino NPP	Czechoslovakia	2014
54	T-100/120-130, stage 3, Sakhalinenergo JSC	TMZ	2014
55	R-50-130/21, stage 4, Nevinnomyssk SDPP	LMZ	2014
56	PT-60-130/13, stage 1, Sakhalinenergo JSC	LMZ	2015
57	T-50/60-130, stage 2, Sakhalinenergo JSC	LMZ	2015
58	K-500-65/3000, TG-1,2, Power Unit 1, Smolensk NPP	KhTZ	2015
59	K-220-44, stage 1–4, Kola NPP	KhTZ	2016
60	K-500-65/3000, stages 7, 8, Leningrad NPP	KhTZ	2016
61	K-210-130-3, stage 2, Pechora SDPP	LMZ	2017
62	K-800-240-5, stage 2, Beryozovskaya SDPP	LMZ	2018
63	T-12/12-60/2,5, stage 1, Bilibino NPP	Czechoslovakia	2017
64	T-100/120-130-2, stage 5, Nizhnekamsk CHPP (PTK-1)	TMZ	2018
65	K-500-65/3000, TG-5, 6, Power Unit 3, Kursk NPP	KhTZ	2019

Extending service life of power-generating equipment. References

Foreign power plants

No.	Turbine	Vendor	Year	Country
1	VT-25-4, stage 4, Sofia CHPP	TMZ	1992	Bulgaria
2	PT-25-90/10, stage 4, Minsk CHPP-3	LMZ	1999	Belarus
3	PT-25-90/10-3, stage 1, Minsk CHPP-3	LMZ	1998	Belarus
4	PT-25/30-90/10, stage 5, Mangyshlak CHPP-1	KTZ	1993	Turkmenistan
5	PT-50-130/7, stages 1–4, Brikel EAD CHPP	TMZ	2002–2008	Bulgaria
6	PT-100-130, stages 7, 8, Minsk CHPP-3	TMZ	1999, 2004	Belarus
7	K-165-130, stage 1, Maritsa-Vostok 2 CHPP	KhTZ	1997, 1999	Bulgaria
8	K-200-130, stages 9, 10, Lugansk SDPP	LMZ	2007	Ukraine
9	K-200-130, stage 7, Estonian SDPP	LMZ	2007	Estonia
10	K-200-130, stage 2, Sisak CHPP	LMZ	1994	Croatia
11	K-200-130, stage 3, Varna CHPP	LMZ	1996	Bulgaria
12	K -200-130, stages 1–4, Maritsa-Vostok 3 CHPP	LMZ	1996–1998	Bulgaria
13	K-200-130, stages 3, 5, Kosovo-A CHPP	LMZ	1997, 1998	Yugoslavia
14	R-50-130/13, stages 3, 4, Novopolotsk CHPP	TMZ	1998, 2006	Belarus
15	VPT-50-4, stages 1–4, Brikel EAD CHPP	LMZ	2010–2014	Bulgaria
16	HP and IP rotors of turbine T-140-145 Toppila-2	LMZ	2010	Finland
17	HP and IP rotors of turbine K-500-240 Ekibastuz SDPP	LMZ	2011	Kazakhstan
18	K-200-130, stage 1, 5, 7, Estonian SDPP	LMZ	2011–2012	Estonia
19	K-220-44 Loviisa NPP	KhTZ	2014	Finland
20	HP and IP rotors of turbine K-500-240 Ekibastuz SDPP	LMZ	2015	Kazakhstan
21	HP and IP rotors of turbine K-500-240 Ekibastuz SDPP	KhTZ	2015	Kazakhstan
22	K-1000-60/1500-2, Power Unit 5, Kozloduy NPP	KhTZ	2016	Bulgaria
23	K-200-130, stage 3, Jambyl SDPP	LMZ	2018	Kazakhstan

THANKS
FOR YOUR ATTENTION

Phone: +7 (812) 717 23 79
Fax: +7 (812) 717 43 00
Address: Atamanskaya Street 3/6, Saint Petersburg
E-mail: general@ckti.ru
Web-site: www.ckti.ru